CONNECTOR INFORMATION

SERVICE TOOLS

Description	Part Number	Page
CRIMPING TOOL (HEAVY GAUGE WIRE)	529 035 730	10
ECM ADAPTER TOOL	529 036 166	4
ECM TERMINAL REMOVER 2.25	529 036 175	4
ECM TERMINAL REMOVER 3.36	529 036 174	4

SERVICE TOOLS – OTHER SUPPLIER

Description	Part Number	Page
DELPHI TERMINAL EXTRACTOR	12094429	5–6
FCI TERMINAL EXTRACTOR TOOL	54241678	7–8
GM TERMINAL EXTRACTOR	12094430	9
MOLEX 150 TERMINAL EXTRACTOR TOOL	63813 - 1500	7–8

PROCEDURES

⚠ WARNING

When disassembling any connector for repair or replacement on the vehicle, always disconnect the battery to ensure all electrical power is removed and prevent any possibility of a short circuit. Refer to *CHARGING SYSTEM* subsection.

DIAGNOSTIC CONNECTOR (DEUTSCH)

Connector Disassembly and Reassembly

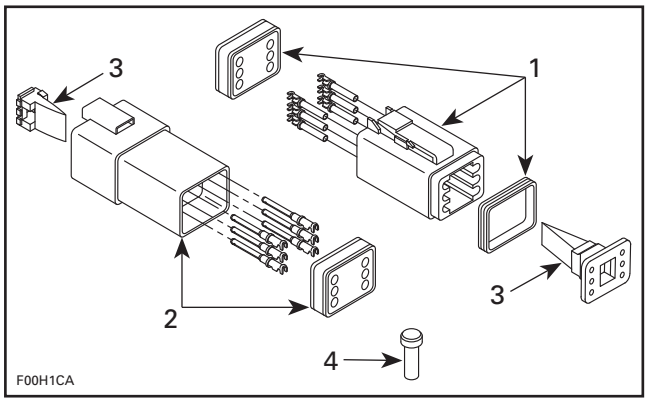

TYPICAL - DEUTSCH CONNECTOR
1. *Male connector*
2. *Female connector*
3. *Secondary lock*
4. *Sealing cap*

NOTICE Do not apply dielectric grease on terminal inside connector.

To remove terminals from connector, proceed as follows:

1. Using long nose pliers, pull out the plastic lock from between the terminals.

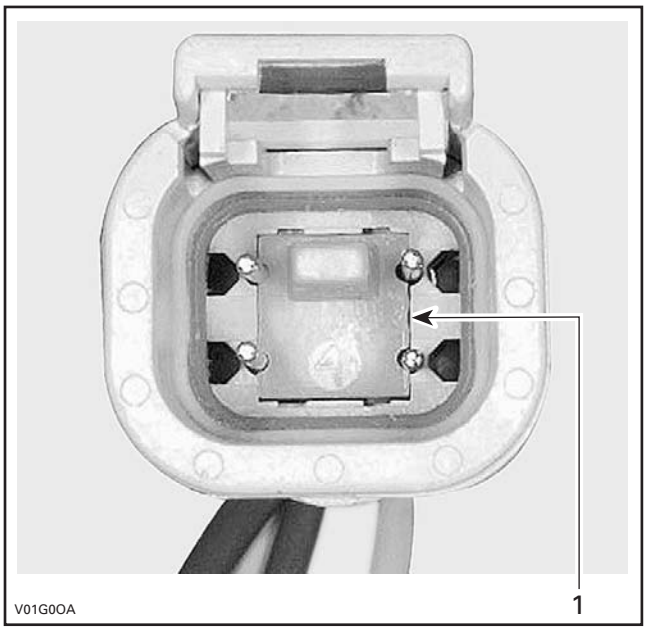

TYPICAL - FEMALE CONNECTOR
1. *Female lock*

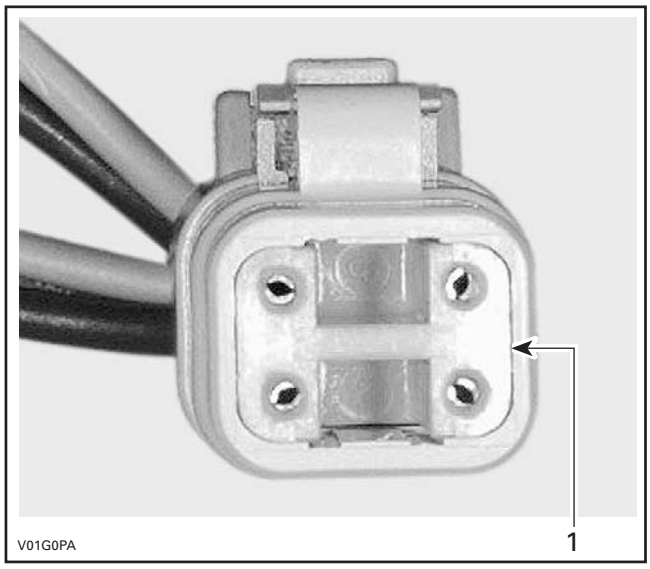

TYPICAL - MALE CONNECTOR
1. Male lock

NOTE: Before pin extraction, push wire forward to relieve pressure on retaining tab.

2. Insert a 4.8 mm (.189 in) wide screwdriver blade inside the front of the terminal cavity.
3. Pry the retaining tab away from the terminal while gently pulling the wire and terminal out of the back of the connector.

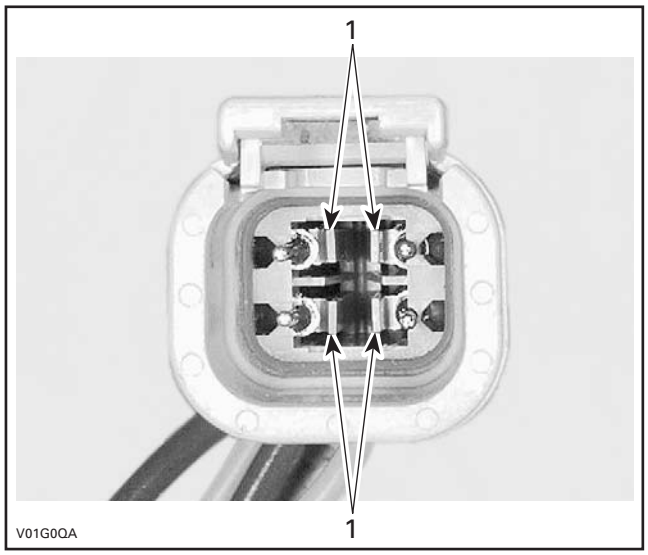

TYPICAL - FEMALE CONNECTOR
1. Retaining tabs

To install:

1. For insertion of a terminal, ensure the plastic lock is removed.
2. Insert terminal through the back of the connector in the appropriate position, and push it in as far as it will go. You should feel or hear the terminal lock engage.
3. Pull back on the terminal wire to ensure the retention fingers are holding the terminal.
4. After all required terminals have been inserted, the lock must be installed.

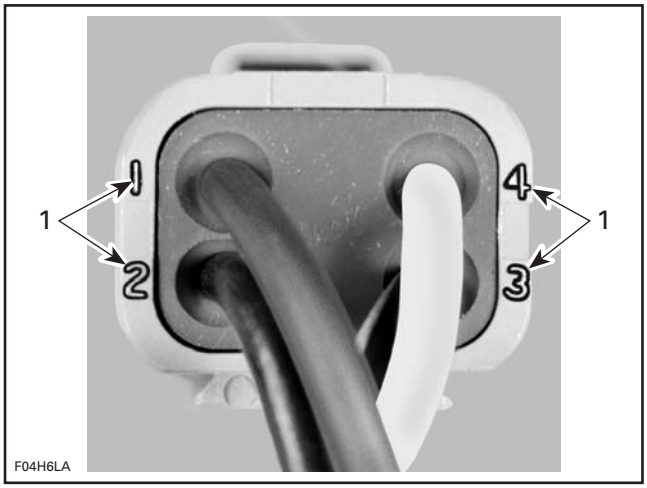

TYPICAL - CONNECTOR PIN-OUT
1. Terminal position identification numbers

ECM CONNECTOR (MOLEX)

There are 2 connectors on the ECM.

The engine wiring harness connector is connected to ECM connector "A". The vehicle wiring harness connector is connected to ECM connector "B".

Each ECM connector has 48 pins however, connectors "A" and "B" are not interchangeable due to their specific keyways.

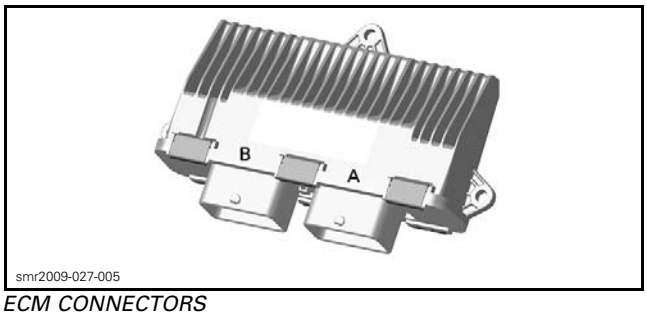

ECM CONNECTORS

Connector Removal

1. To access the ECM, refer to *ELECTRONIC FUEL INJECTION (EFI)* subsection.
2. Press **and hold** the locking tab on the connector to be disconnected.

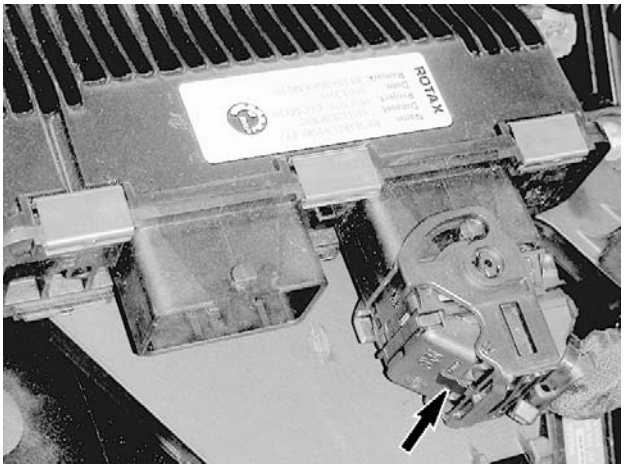

smr2009-045-011_a

LOCKING TAB TO PRESS AND HOLD

3. As you hold the locking tab, rotate the connector locking cam until it stops.

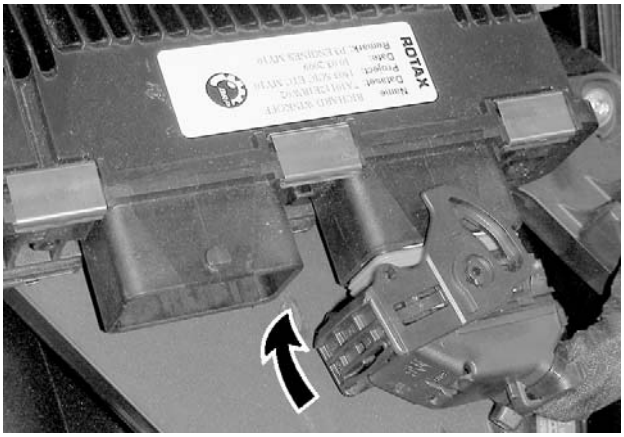

smr2009-045-012_a

CONNECTOR LOCKING CAM ROTATION TO RELEASE

4. Pull connector off ECM.

smr2009-045-013_a

Connector Installation

1. Fully open connector locking cam.

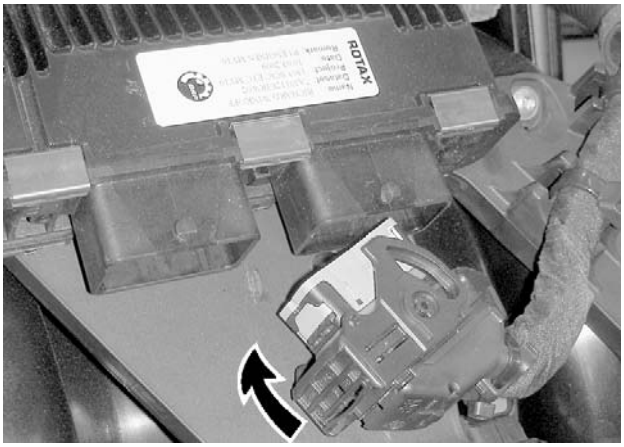

smr2009-045-013_b

CONNECTOR LOCKING CAM IN RELEASE POSITION

2. Insert connector on ECM.
3. As you push the connector onto the ECM, rotate the connector locking cam until it snaps locked.

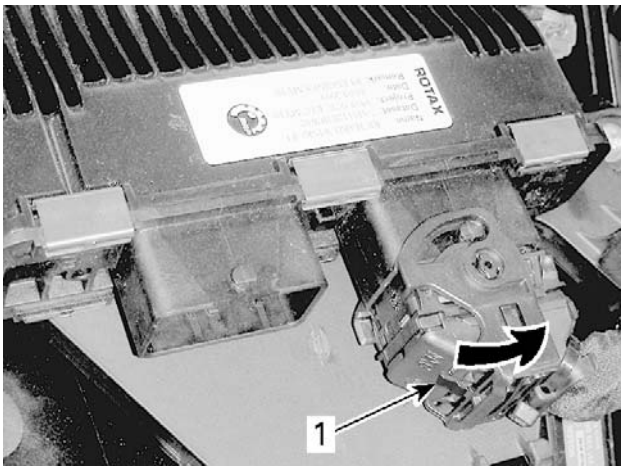

smr2009-045-011_b

1. Locked here

4. Ensure the locking tab is fully out.

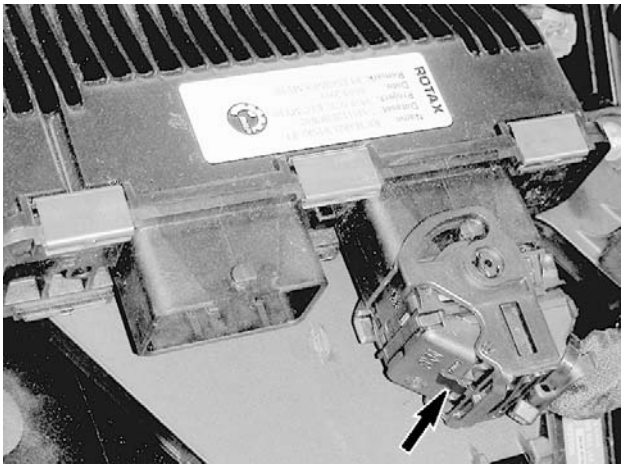

smr2009-045-011_a

LOCKING TAB FULLY OUT

Connector Inspection

Before replacing an ECM, always check electrical connections.

1. Ensure connector locking mechanism is functioning properly.
2. Ensure all wire terminals (pins) are properly locked in the connector.
3. Ensure they are very tight, make good contact with the pins in the ECM.
4. Ensure the pins in the harness connector and the ECM connector are clean, shiny and corrosion-free.
5. Check wiring harness for signs of scoring.

NOTE: A "defective ECM module" could possibly be repaired simply by disconnecting and reconnecting it.

NOTICE **Do not apply any lubricant product to the pins of the ECM connector.**

Connector Probing

The most recommended and safest method to probe the MOLEX (ECM) connector terminals is to use the ECM ADAPTER TOOL (P/N 529 036 166). This tool will prevent deforming or enlarging of the terminals, which would lead to bad ECM terminal contact creating intermittent or permanent problems.

529036166

1. Disconnect the ECM connector to be probed, and reconnect it on the ECM adapter.
2. Probe wire terminals of the circuit to be tested directly in the adapter holes.

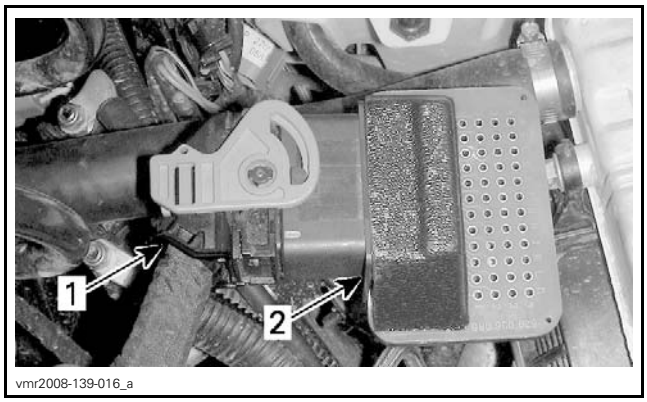

vmr2008-139-016_a

TYPICAL
1. ECM connector
2. ECM adapter

NOTICE **Never probe directly on the ECM harness connector. This could change the shape or enlarge the terminals and create intermittent or permanent contact problems.**

Connector Terminal Removal (Harness Connector)

To remove a signal terminal from the ECM harness connector, use the ECM TERMINAL REMOVER 2.25 (P/N 529 036 175).

To remove a power terminal, use the ECM TERMINAL REMOVER 3.36 (P/N 529 036 174).

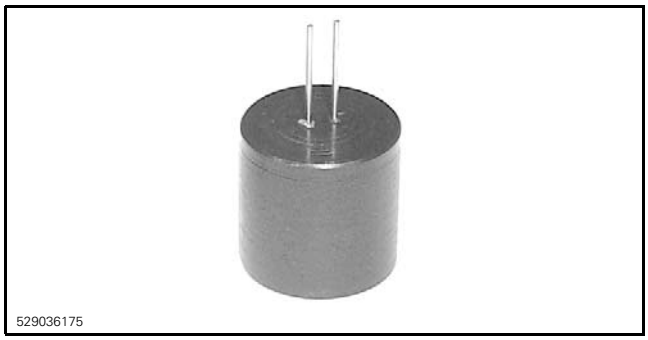
529036175

1. Remove rear protector from connector.
2. Pull out the connector lock.

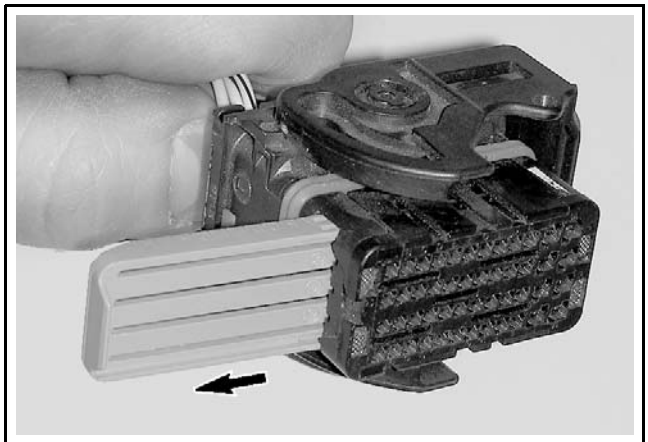
smr2009-045-025_a

3. Insert tool to unlock terminal.

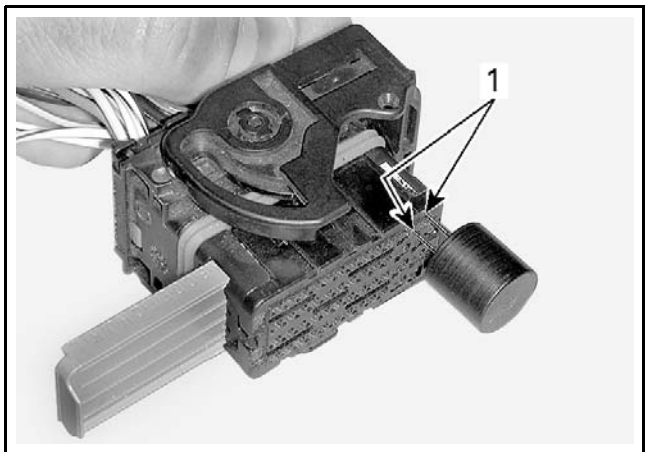

smr2009-045-026_a

1. Unlock here

4. Gently pull on the wire to extract the terminal out the back of the connector.

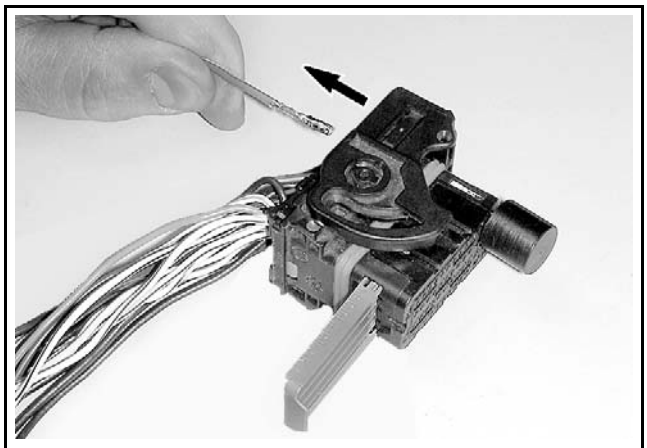
smr2009-045-027_a

NOTICE Before installing wire terminals in the connector, ensure all terminals are properly crimped on wires. After installation of wire terminals in the connectors, ensure they are properly locked by gently pulling on them as if to extract them.

TAS AND OTAS CONNECTORS (DELPHI/PACKARD)

Connector Terminal Removal

To remove a terminal (pin) from the connector, use a special tool such as the DELPHI TERMINAL EXTRACTOR (P/N 12094429).

smr2010-052-001

DELPHI TERMINAL EXTRACTOR (P/N 12094429)

NOTE: Grinding the tool end to a taper is required.

1. Carefully insert the tool in the space provided to release the pin lock.
2. Push the pin out the front of the connector by pushing on the wire.

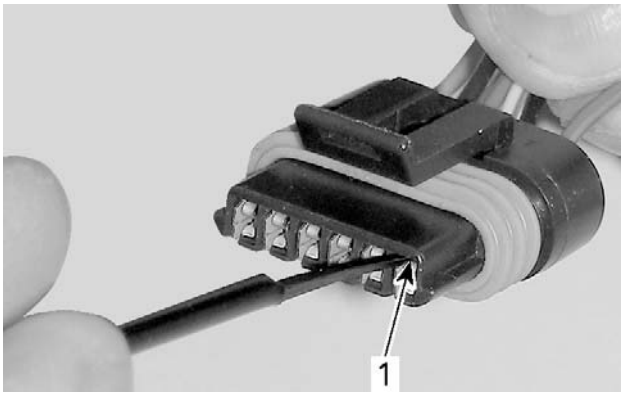

smr2009-045-014_a

1. Unlock terminal here

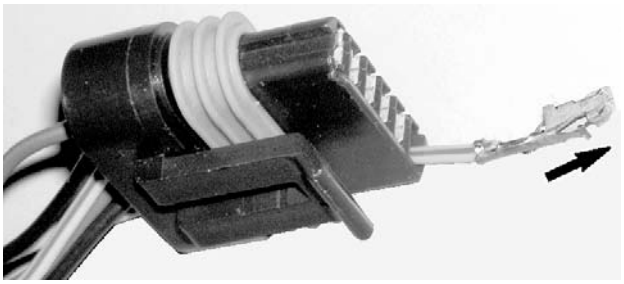

smr2009-045-015_a

NOTICE Before installing terminals in the connectors, ensure all terminals are properly crimped on the wires. After installation of the wire terminals in the connectors, ensure they are properly locked by gently pushing on them as if to extract them.

FUEL PUMP AND STARTER SOLENOID CONNECTORS (DELPHI)

Terminal Removal

1. To remove a terminal from connector, first remove the locking cap.

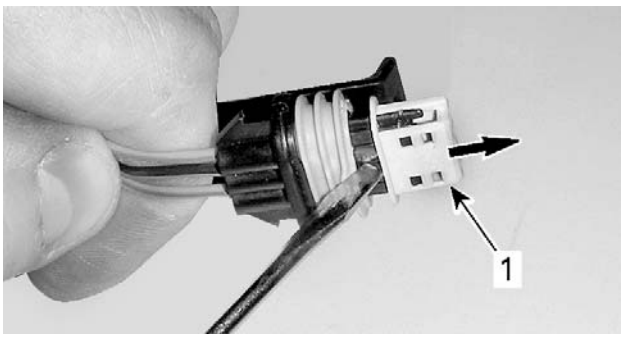

smr2009-045-023_a

1. Pry out locking cap

2. Carefully insert the DELPHI TERMINAL EXTRACTOR (P/N 12094429) in the space provided to release the pin lock.

smr2010-052-001

DELPHI TERMINAL EXTRACTOR (P/N 12094429)

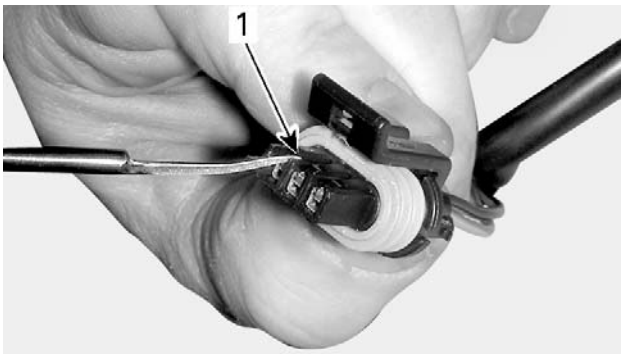

smr2009-045-024_a

1. Unlock here

3. Gently pull on the wire to extract the pin out the back of the connector.

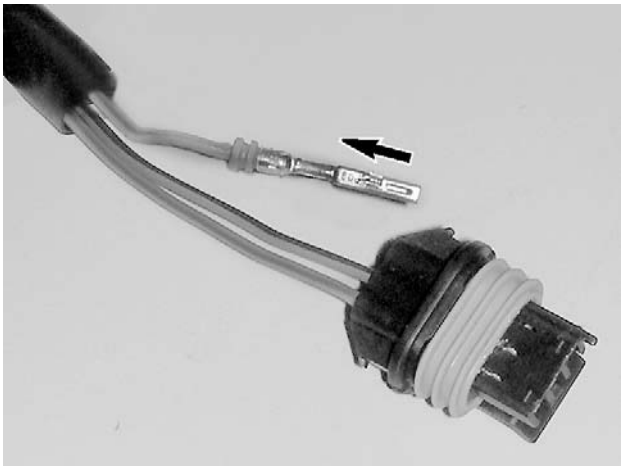

smr2009-045-028_a

NOTICE Before installing terminals in the connectors, ensure all terminals are properly crimped on the wires. After installation of the wire terminals in the connectors, ensure they are properly locked by gently pushing on them as if to extract them.

STEERING CONNECTOR (20 PIN MOLEX 150)

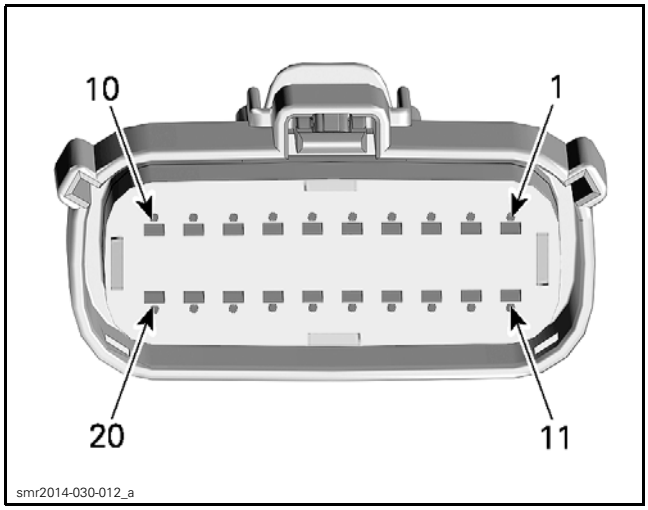

1. Female connector pin-out (sockets)

Connector Disconnect

Pull back the red secondary lock from the connector latch lever. Do not remove it from the latch.

Push the two connector assemblies together to unload the latch.

Depress the latch lever and pull the two connector assemblies apart.

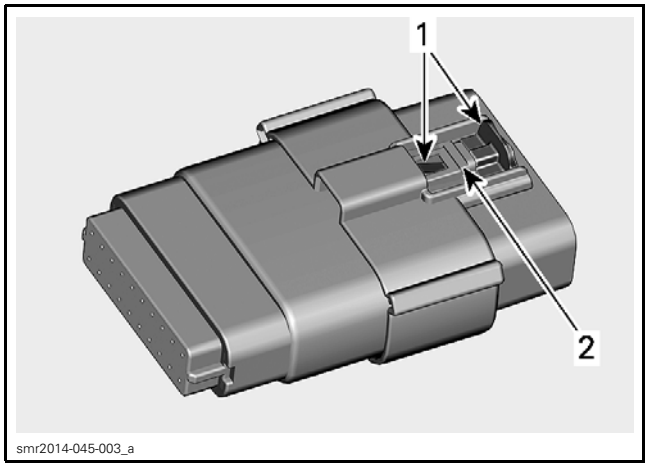

1. Red secondary lock (shown out)
2. Latch lever

Connector Probing

1. Disconnect the steering connector in the vehicle and connect it to the Diagnostic Harness (P/N 284560054).
2. Probe the applicable circuit using the test connector on the diagnostic harness.

NOTICE **Attempting to probe the connector without using the diagnostic connector may damage the connector pins, or even cause a short circuit if testing an energized circuit.**

Socket Extraction (Female Connector)

1. Insert a small flat screwdriver in the pry holes of the socket locator, on the socket side of the connector.

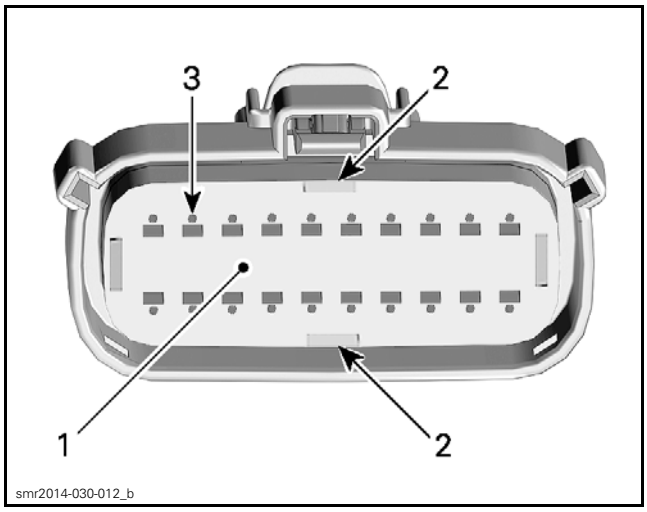

1. Socket locator
2. Pry holes
3. Holes for inserting terminal extractor tool

2. Carefully pull out the socket locator out to the detent position (approximately 5 mm).

NOTE: Do not remove the socket locator from the connector housing.

3. Insert the extractor tool in the small hole adjacent to the socket.

NOTE: Push the extractor tool in only as far as required to release the lock from the socket. The tool should slide along the socket and be inserted between the socket and the lock.

REQUIRED TOOL
FCI TERMINAL EXTRACTOR TOOL (P/N 54241678) or,
MOLEX 150 TERMINAL EXTRACTOR TOOL (P/N 63813 - 1500)

FCI TERMINAL EXTRACTOR TOOL (P/N 54241678)

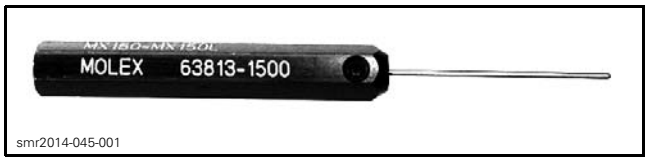

MOLEX 150 TERMINAL EXTRACTOR TOOL 6(P/N 3813 - 1500)

4. Gently pull on the wire to extract the socket out the back of the connector.

Pin Extraction (Male Connector)

1. Using a pair of thin long nose pliers, pull the pin locator out to the detent position (approximately 5 mm). This will allow unlocking of the pins.

NOTICE **Do not attempt to remove the pin locator or damage will occur. Be careful not to bend the pins when using the pliers.**

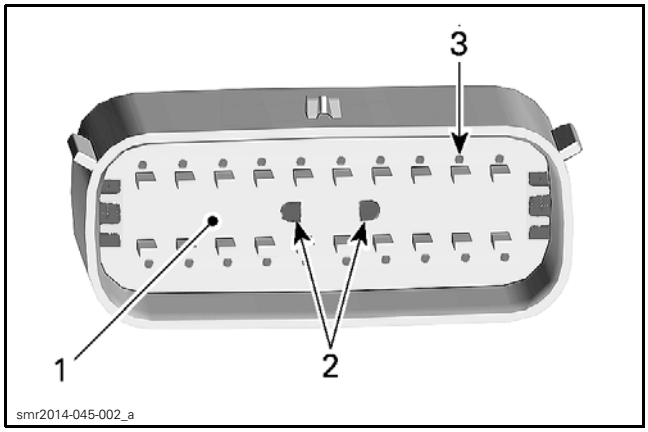

1. *Pin locator*
2. *Insert long nose pliers here*
3. *Holes for inserting terminal extractor tool*

2. Insert the extractor tool in the small hole adjacent to the pin.

NOTE: Push the extractor tool in only as far as required to release the lock from the pin. The tool should slide along the pin and be inserted between the pin and the lock.

REQUIRED TOOL
FCI TERMINAL EXTRACTOR TOOL (P/N 54241678) or,
MOLEX 150 TERMINAL EXTRACTOR TOOL (P/N 63813 - 1500)

FCI TERMINAL EXTRACTOR TOOL (P/N 54241678)

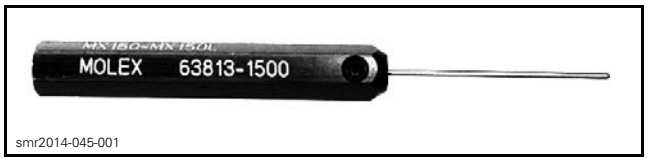

MOLEX 150 TERMINAL EXTRACTOR TOOL 6(P/N 3813 - 1500)

3. Gently pull on the wire to extract the pin out the back of the connector.

Pin Insertion

1. Ensure the terminal (pin) is properly crimped onto the wire.
2. Ensure the pin locator (the white plastic insert in the connector) is out in the detent position.
3. Insert the pin in through the back of the connector.

NOTE: When inserting the pin, insert the stepped portion facing the notch in the connector pin hole.

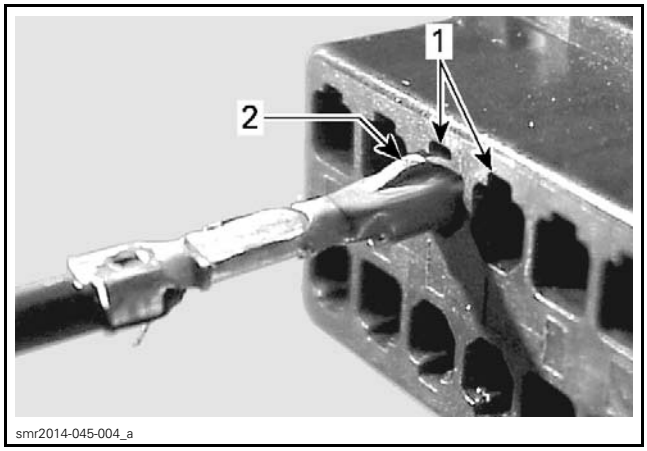

TYPICAL - PIN INSERTION
1. *Notch*
2. *Stepped portion towards notch*

4. Push the pin in until the pin lock engages the pin.
5. Gently pull on the pin to ensure it is properly locked.
6. Repeat previous steps for each pin to be inserted.
7. Push the pin locator into the connector to the locked position.

Reconnecting the 20 pin MOLEX Connector

1. Insert the male connector into the female connector and push it in until the latch lever fully engages.
2. Push in the secondary lock (red tab) until it fully engages into the latch lever.

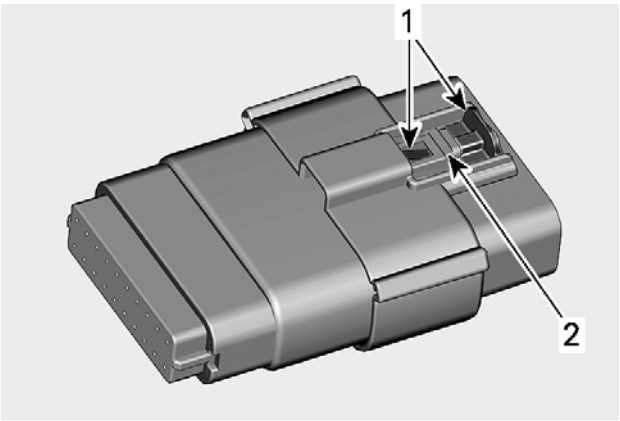

smr2014-045-003_a

1. *Red secondary lock (shown out)*
2. *Latch lever*

ENGINE CONNECTOR (4 PIN MOLEX 150)

Refer to *STEERING CONNECTOR (20 PIN MOLEX 150)* for applicable procedures.

MULTIFUNCTION GAUGE CONNECTOR (6 PIN MOLEX 150)

Refer to *STEERING CONNECTOR (20 PIN MOLEX 150)* for applicable procedures.

VOLTAGE REGULATOR/RECTIFIER CONNECTOR (FURUKAWA)

Terminal Removal

1. Remove the secondary lock (plastic insert).

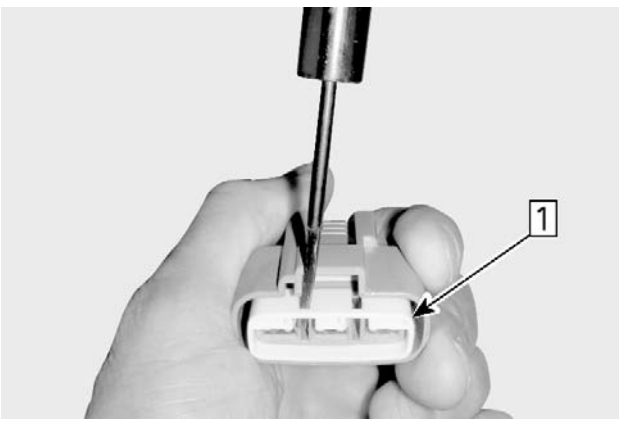

smr2010-050-021_a

Step 1: Remove the secondary lock

2. Carefully insert the GM TERMINAL EXTRACTOR (P/N 12094430) between the lock and the pin to release the pin.

smr2010-052-003

GM TERMINAL EXTRACTOR (P/N 12094430)

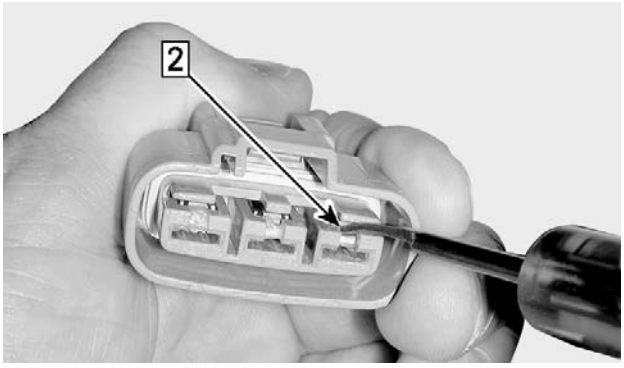

smr2010-050-022_a

Step 2: Insert GM extractor tool (P/N 12094430)

3. Gently pull on the wire to extract the pin out the back of the connector.

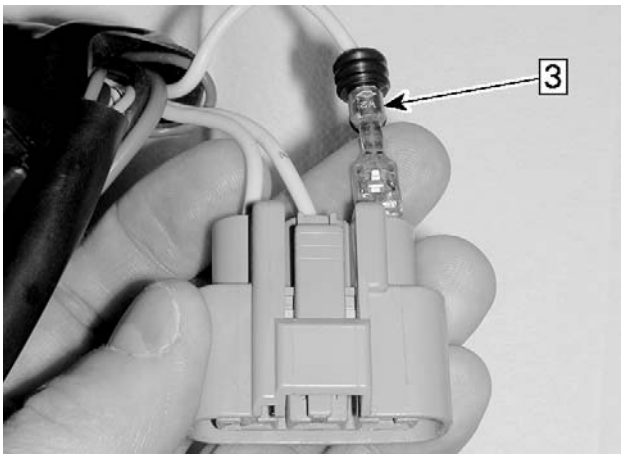

smr2010-050-023_a

Step 3: Pull wire to extract pin

NOTICE Before installing terminals in the connectors, ensure all terminals are properly crimped on the wires. After installation of the wire terminals in the connectors, ensure they are properly locked by gently pushing on them as if to extract them.

BATTERY CABLES

Battery Cable Crimping

Carefully strip the wire approximately to 10 mm (3/8 in) in length, using a wire stripping tool or sharp blade/knife.

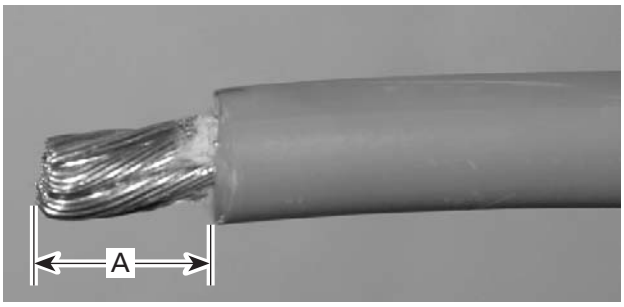

A32E2QA

A. 10 mm (3/8 in)

NOTE: Make sure not to cut wire strands while stripping the wire.

Install the appropriate terminal on the wire according to the requirement. Refer to appropriate *PARTS CATALOG*.

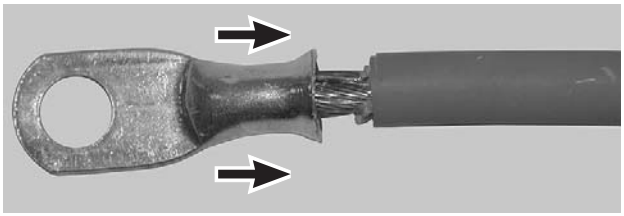

A32E2RA

INSTALLATION OF TERMINAL

Follow the instructions provided with the CRIMPING TOOL (HEAVY GAUGE WIRE) (P/N 529 035 730) to select the proper position of the tool.

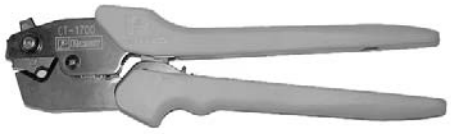

529035730

NOTE: Different wires require different crimping pliers settings, so make sure to follow the instruction supplied with the tool.

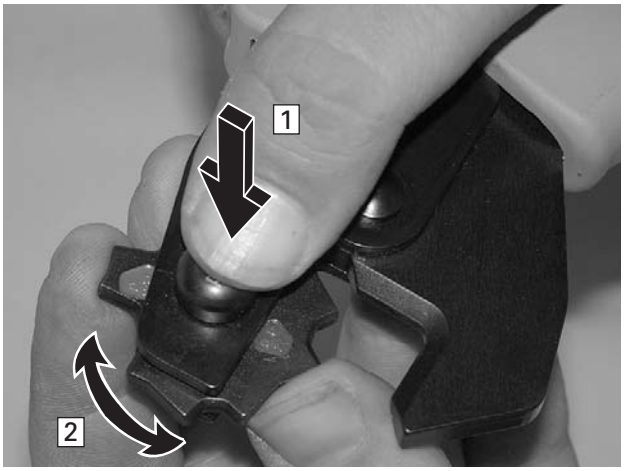

A32E2SA

POSITIONING THE CRIMPING PLIERS
Step 1: Press
Step 2: Rotate

After positioning the crimping pliers, crimp the terminal already installed on wire.

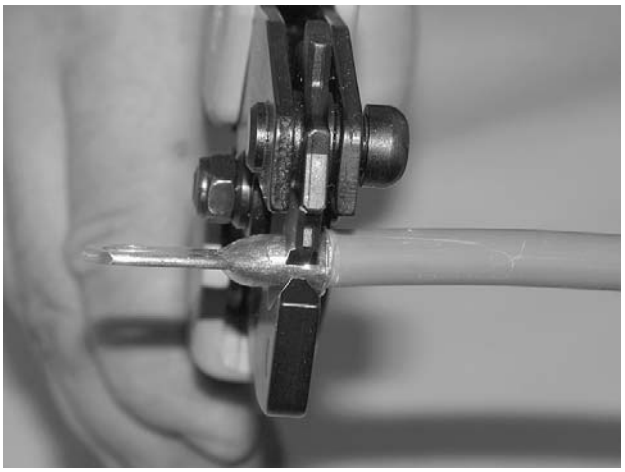

A32E2TA

CRIMPING OF WIRE

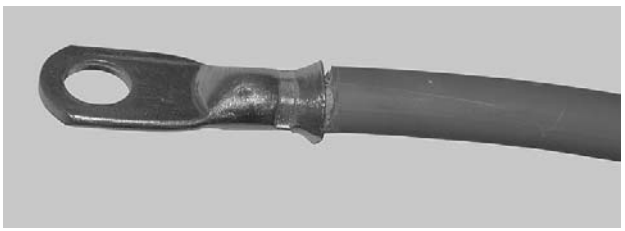

A32E2UA

PROPERLY CRIMPED WIRE

To verify, if the wire is properly crimped, apply some pulling force on wire and the terminal at the same time from both directions.

NOTICE **Never weld the wire to the terminal. Welding can change the property of the wire and it can become brittle and break.**

Install the protective heat shrink rubber tube on the terminal. Heat the heat shrink rubber tube using the heat gun so that it grasps the wire and the terminal.

NOTICE **Make sure that the protective heat shrink rubber tube has been properly installed and no part of wire is exposed.**